SIEMENS

OpenAir™

Handheld Tool for VAV Controllers and Communicative Actuators

AST20

Handheld Tool for VAV Compact Controllers and Communicative Actuators
Software version V2.31

For configuration and maintenance of OpenAir VAV compact and modular controllers and actuators with Modbus RTU communication:

- G..B181.. VAV compact controllers 5 / 10 Nm (series D or newer)
- ASV181.. VAV modular controller
- G..B111../MO communicative actuators 5 / 10 Nm (no spring-return)
- Monitoring and configuration of VAV controllers and communicative actuators
- Bus configuration of Modbus / BACnet MS/TP field devices
- Mass configuration (“Copying mode”)
- Diagnostic and maintenance data
- Access levels for service and OEM

A6V10631836_en--_b
2018-11-21

Siemens
Building Technologies

Type summary

Product no.	Stock no.	Operating voltage	Power consumption
AST20	S55499-D165	Powered by field device (AC 24 V ±20%)	1.5 VA

Ordering (Example)

Product no.	Stock no.	Description	Quantity
AST20	S55499-D165	Handheld tool for VAV controllers and communicative actuators	1

Delivery

The transport case contains one AST20 handheld tool, one 7-pin cable, and one 6-pin cable.

Equipment combinations

VAV compact /modular controllers G..B181.1E/.. and ASV181.1E/..				
ASN	**Stock No.**	**Datasheet**	**Technical Basics**	**Mounting instr.**
G..B181.1E/3	--	N3544	P3544	M3544
ASV181.1E/3	--			
GDB181.1E/KN	S55499-D134	N3547	P3547	M3547
GLB181.1E/KN	S55499-D135			
GDB181.1E/MO	S55499-D166	A6V10631832	A6V10631862	A6V10523083
GLB181.1E/MO	S55499-D167			
GDB181.1E/BA	S55499-D168	A6V10631834	A6V10631864	
GLB181.1E/BA	S55499-D169			

Actuators with Modbus RTU communication G..B111.1E/MO and G..B111.9E/MO				
ASN	**Stock No.**	**Datasheet**	**Technical Basics**	**Mounting instr.**
GDB111.1E/MO	S55499-D191	A6V10881141	Z4634	M4634
GLB111.1E/MO	S55499-D199			
GLB111.9E/MO	S55499-D206	A6V10881143	Z4634	A6V10920701

Spare parts

The connection cables can be obtained as spare parts

Spare part	Material no.
6-pin cable	74 424 0126 0
7-pin cable	74 424 0301 0

Software versions

The Software version can be determined in the Handheld tool settings menu, cf. pages 5-7.

Series information	Series A	Series B
Production period	12/2015 – 01/2017	01/2017
Software version	2.22	2.31

Related documents such as environmental declarations, CE declarations, etc., can be downloaded at the following Internet address:

http://siemens.com/bt/download

Notes

Safety

⚠	Caution

National safety regulations

Failure to comply with national safety regulations may result in personal injury and property damage.

- Observe national provisions and comply with the appropriate safety regulations.

Connection to an actuator

Connection of the AST20 to an actuator

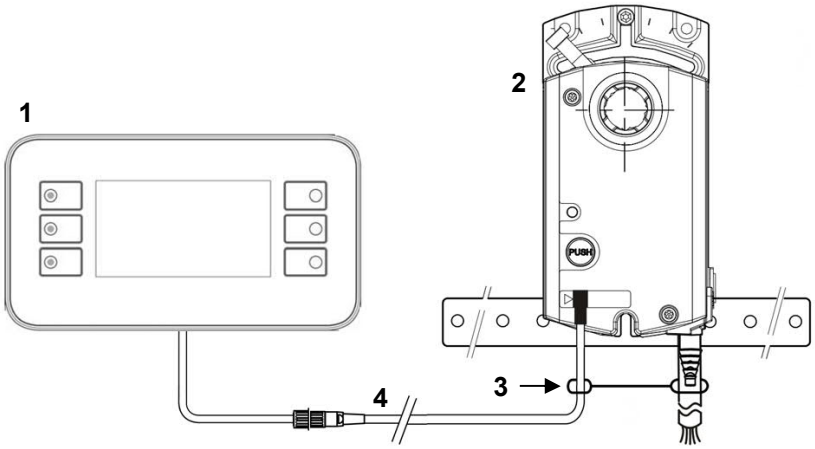

1 AST20
2 G..B181.1E/.. , ASV181.1E/3, or G..B111../MO
3 Strain release strip
4 Connection cable (7-pin or 6-pin)

⚠	Note

7-pin and 6-pin connection cables

Using the wrong connection cable (e.g. 6-pin cable on 7-pin plug) can damage the connected actuator

Maintenance

AST20 handheld tools are maintenance-free.

Do not open the AST20 handheld tool.

Disposal

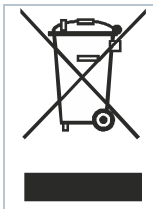

The device is considered electrical and electronic equipment for disposal in terms of the applicable European Directive and may not be disposed of as domestic garbage.

- Dispose of the device through channels provided for this purpose.
- Comply with all local and currently applicable laws and regulations.

Basic operation

The AST20 is operated by five keys.

- Keys UP (3) and DOWN (4) are used to navigate to a menu item.
- If pressing ENTER (5) on a highlighted menu item, the value can be changed with UP/DOWN (if not protected or read-only).
- Pressing ENTER confirms the value change.
- By pressing ESCAPE (2), a value change can be cancelled or a menu page can be left to the next higher level.
- To reset the AST20, press RESET (1) until the display gets dark. The restart takes ca. 20s.

Operation by 5 keys

1	RESET
2	ESCAPE
3	UP
4	DOWN
5	ENTER

Note: After pressing ENTER, changed values are written directly into the VAV compact controller.

Access levels

- For VAV controllers, the AST20 supports two access levels, “OEM” and “SVC” (service). The access level is shown in the title bar (see below). The SVC level has some restrictions (Vn value and Vnom cannot be changed, mass configuration is not available).
- To enter the OEM level, navigate to “AST20 settings” and select “Enter OEM password”.
- The initial OEM password can be obtained through the local Siemens sales representative. The OEM password can be changed after entering the default password. In case the user-defined OEM-password is lost, the AST20 can be reset to ex-works settings.

Screen

AST20 screen elements

1	AST20 self-identification
2	Connected field device type
3	Page counter (page / pages total)
4	Access level (SVC / OEM)
5	Menu item (not highlighted)
6	Highlighted / selected menu item

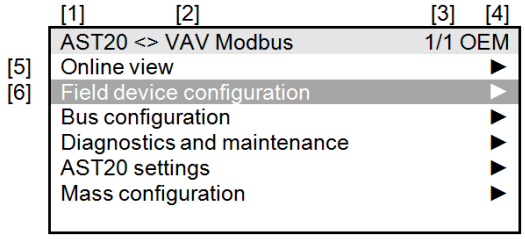

The highlighting bar is moved with the UP/DOWN keys, where ENTER either opens the sub-menu (example 1) or allows changing the selected value using the UP/DOWN keys (example 2).

Basic operation - examples

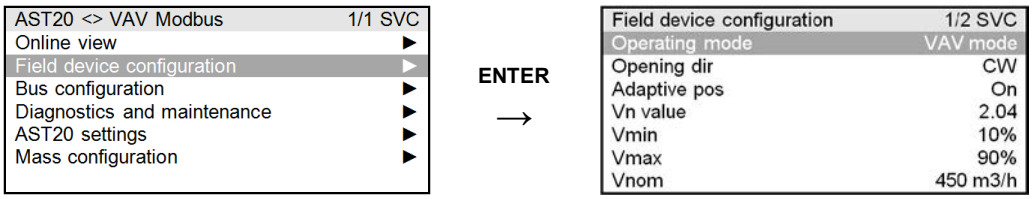

Example 1: Entering a sub-menu

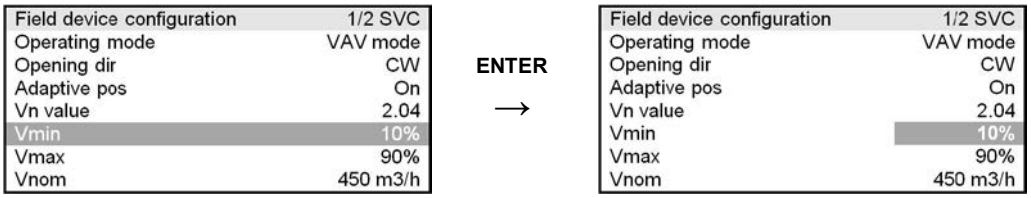

Example 2: Changing a value

Menu tree for communicative VAV controllers G..B181.. (excl. G..B181../3)

Title bar	Information on connected device and access level (SVC or OEM)
Online view	
Setpoint: flow / pos.	Display of actual setpoint (depends on operating mode)
Actual flow	Actual flow in % and m^3/h (or l/s)
Actual position [1]	Actual relative damper position
Diff. pressure	Actual differential pressure in Pa
Override control	Override control: Off, open, close, stop, setpoint
Field device configuration	
Operating mode	Operating mode (flow control / position control)
Opening direction	Opening direction CW or CCW
Adaptive positioning	Adaptive positioning On or Off
Vn value [2]	Coefficient for nominal differential pressure
Vmin	Minimum volume flow [%]
Vmax	Maximum volume flow [%]
Vnom [2]	Nominal volume flow [m3/h] or [l/s]
Altitude level	Altitude level in 100m steps
Unit vol. flow	m^3/h or l/s
Unit Vmin & Vmax	Display Vmin / Vmax in absolute (m^3/h / l/s) or in relative units (%)
Bus configuration [1]	
Address	Address for RS-485 networks (Modbus / BACnet MS/TP)
Baudrate	Baudrate
Transmission format	Start-/Stopbit, Parity
Termination	Termination electronically switchable
Backup Mode	Setpoint monitoring On or Off
Backup Position	Target position if backup mode entered
Backup Timeout	Setpoint monitoring waiting time
Diagnostics and maintenance	
Field device info	Basic information on connected device
Field device statistics	Counters and statistical data of connected device
OEM default settings [2]	Reset to OEM settings / Read or set OEM settings
AST20 settings	
Authorization level	Change from SVC level to OEM level (password required)
Handheld tool settings	Settings like language, brightness etc. and software version information
Enter / change[2] OEM password	Entering password for OEM level, or changing password if in OEM level
Persistent OEM level [2]	Make OEM level persistent (active after power-off of AST20)
Logoff OEM [2]	Leave OEM level
Mass configuration	
Mass configuration	Activates mass configuration: cf. description below
Resume mass configuration	Resume mass conf. if parameters have been changed on a downloaded configuration
Address incrementation [1]	Automatically incrementing the address when using mass configuration

[1] Available for Modbus / BACnet MS/TP types
[2] Write access only in OEM access level

Menu tree for VAV controllers G..B181../3

Title bar	Information on connected device and access level (SVC or OEM)
Online view	
Setpoint: flow / pos.	Display of actual setpoint (depends on operating mode)
Actual flow / position	Actual flow or damper position in %
Diff. pressure	Actual differential pressure in Pa
Override control	Override control: Off, open, close, stop, setpoint
Field device configuration	
Operating mode	Operating mode (VAV / STP / 3P)
Opening direction	Opening direction CW or CCW
Adaptive positioning	Adaptive positioning On or Off
Vn value [3)]	Coefficient for nominal differential pressure
Vmin	Minimum volume flow [%]
Vmax	Maximum volume flow [%]
Vmid [4)]	Mid volume flow [%]
Vnom [3)]	Nominal volume flow [m3/h] or [l/s]
U-signal	Setting for the 0/2..10V feedback signal to flow or position
Range Y-signal	Setting the signal range to 0..10V or 2..10V
Range U-signal	Setting the signal range to 0..10V or 2..10V
Altitude level	Altitude level in 100m steps
Unit vol. flow	m^3/h or l/s
Unit Vmin & Vmax	Display Vmin / Vmax in absolute (m^3/h / l/s) or in relative units (%)
Diagnostics and maintenance	
Field device info	Basic info on connected device
Field device statistics	Counters and statistical data of connected device
OEM default settings [3)]	Reset to OEM settings / Read or set OEM settings
AST20 settings	
Authorization level	Change from SVC level to OEM level (password required)
Handheld tool settings	Settings like language, brightness etc. and software version information
Enter / change[3)] OEM password	Entering password for OEM level, or changing password if in OEM level
Persistent OEM level [3)]	Make OEM level persistent (active after power-off of AST20)
Logoff OEM [3)]	Leave OEM level
Mass configuration	
Mass configuration	Activates mass configuration: cf. description below
Resume mass configuration	Resume mass conf. if parameters have been changed on a downloaded configuration

[3)] Write access only in OEM access level

[4)] Used in STP mode only. Note: Vmax can’t be lower than Vmid!

Menu tree for communicative actuators G..B111../MO

Title bar		Information on connected device
Online view		
	Setpoint: position	Display of actual setpoint
	Actual position	Actual relative damper position
	Override control	Override control: Off, open, close, stop, setpoint
Field device configuration		
	Opening direction	Opening direction CW or CCW
	Adaptive positioning	Adaptive positioning On or Off
	Min. position	Minimum position [%]
	Max. position	Maximum position [%]
	Startup setpoint	Setpoint used after startup until setpoint from controller is received
Bus configuration		
	Address	Address for RS-485 networks (Modbus / BACnet MS/TP)
	Baudrate	Baudrate
	Transmission format	Start-/Stopbit, Parity
	Termination	Termination electronically switchable
	Backup Mode	Setpoint monitoring On or Off
	Backup Position	Position if backup mode entered
	Backup Timeout	Monitoring waiting time
Diagnostics and maintenance		
	Field device info	Basic information on connected device
	Field device statistics	Counters and statistical data of connected device
AST20 settings		
	Handheld tool settings	Settings like language, brightness etc.
Mass configuration		
	Mass configuration mode	Activates mass configuration: cf. description below
	Resume mass configuration	Resume mass conf. if parameters have been changed on a downloaded configuration
	Address incrementation	Automatically incrementing the address when using mass configuration

When using VAV controllers, a distinction between operating and OEM parameters must be made. Operating parameters are being used during the runtime of a VAV controller, whereas OEM Parameters overwrite the operating parametrers in case of a full reset. OEM parameteres can only be changed when the access level “OEM” is activated.

Auto calibration (VAV compact controllers / OEM access level)

Path: Diagnostics and maintenance / OEM default settings / Auto calibration

- Connect the VAV controller to the air duct and make sure that the nominal air volume flow is applied in the duct.
- Manually put the damper blade into the “fully open” position using the gear disengagement lever (red switch at the side of the VAV controller)
- Turn auto calibration to “On”.
- The AST20 calculates the flow coefficient (Vn value) by measuring the differential pressure for the applied nominal air flow
- The calculated Vn value is written into the operating and into the OEM settings.

Mass configuration (communicative actuators; VAV compact controllers: OEM access level)

Path: Mass configuration

- By turning this function on, the configuration (all parameters that can be set by the user) from one field device is loaded into the AST20 and stored there as a “template”.
- The stored configuration can be written into 1..n devices of the same type.
- After writing a stored configuration, changes can be made on the connected field device without losing the stored configuration.
- If a configuration is changed after loading it into a field device, it can be made the new template configuration.
- For Modbus and BACnet devices the bus address can automatically be incremented.

Mass configuration without change of selected parameters in the target device

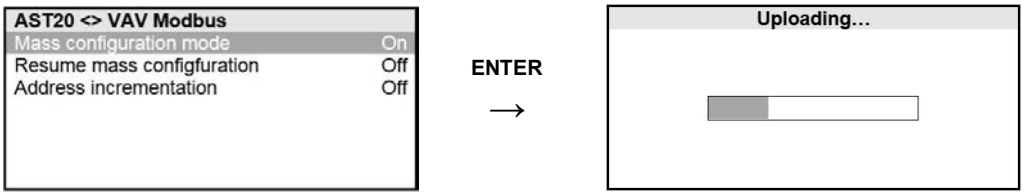

Step 1: Activating the mass configuration mode. The configuration of the connected field device is uploaded into the non-volatile storage of the AST20.

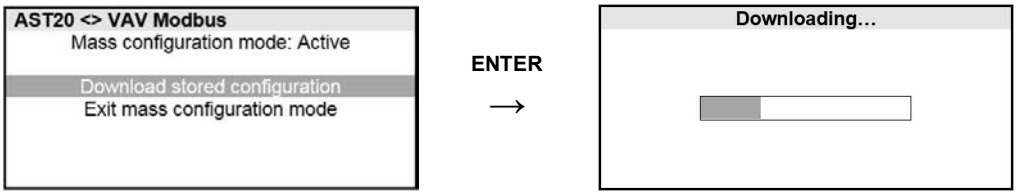

Step 2: After connecting the AST20 to the next field device (of the same type), the stored configuration can be donwloaded into this target device.

Mass configuration with change of selected parameters in the target device

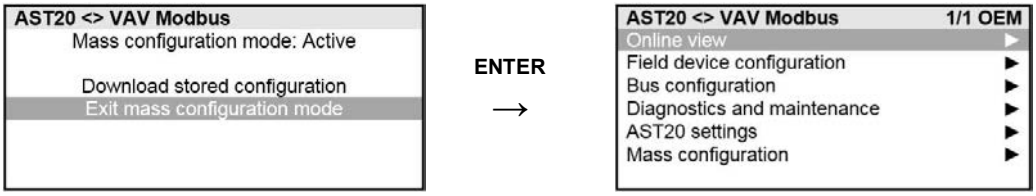

Step 1: The mass configuration mode can (temporarily) be left after upload of the configuration: Selected parameters can then be changed.

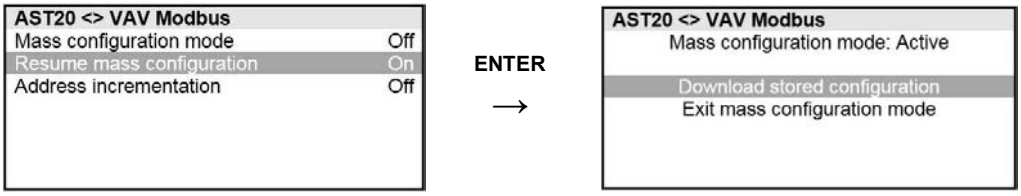

Step 2: After making the desired changes, mass configuration can be resumed with the original configuration; or the changed configuration can be made the new “template“ configuration by newly activating “mass configuration“.

OEM Reset (VAV compact controllers / OEM access level)

Path: Diagnostics and maintenance / OEM default settings / OEM reset

- Triggering this function writes the OEM reset values over the operating values.

Copy working set to OEM values (VAV compact controllers / OEM access level)

Path: Diagnostics and maintenance / OEM default settings

- Triggering this function writes the operating values into the OEM reset values.

Password change

Path: Settings

- The default password can be changed with this function.

Technical data

Power supply		
Powered by controller		DC 24 V ±20%, 30 mA AC 24 V ±20%, 60 mA

Display		
LCD type		STN blue, negative
Resolution		Dot matrix 240 x 128
Backlight		White LEDs
Size	LCD size	93 x 58 mm
	Visible area size	86.15 x 47.78 mm
Visibility angle[1)]	Angle from top	41°
	Angle from bottom	21°

[1)] Visibility angle is the angle at which the contrast ratio is greater than 2.

General data		
Dimensions		173.2 x 95.5 x 22.1 mm
Weight	excl. packaging	305 g
	incl. packaging and cables	950 g
Lens		Makrolon 2405, transparent
Keypad		Silicon rubber, RAL7035
Housing	Front housing	Makrolon 6485, RAL7035
	Rear housing	Makrolon 6485, RAL5014

Connection cables		
Cable at handheld tool	Type	74 424 0117 0
	Length	0.29 m
Cable with 7-pin connector	Type	74 424 0301 0
	Length	2.6 m
Cable with 6-pin connector	Type	74 424 0126 0
	Length	2.6 m

Degree of protection		
Degree of protection	Degree of protection acc. to EN 60529	IP65
Safety class	Safety class acc. to EN 60730	III
UV protection test level		IEC 60068-2-9, 1.13 kW/m^2, procedure B, 7 cycles
Pollution degree		2

Environmental conditions		
Operation		IEC 60721-3-3
	Temperature	-40…70 °C
	Temperature restriction on LCD	-20…60 °C
	Humidity	5…95% r.h. (non-condensing)
	Air pressure	Min. 700 hPa, corresponding to Max. 3,000 m above sea level
Transport and storage		IEC 60721-3-2
	Temperature	-40…70 °C
	Humidity	5…95% r.h. (non-condensing)
	Air pressure	Min. 260 hPa, corresponding to Max. 10,000 m above sea level

Directives and Standards	
Product standard	EN60730-1
Electromagnetic compatibility (Application)	For residential, commercial and industrial environments
EU Conformity (CE)	8000080607 [2]
RCM Conformity	8000080608 [2]
FCC	FCC part 15(EMC emission FCC CFR 47 part 15)

Environmental compatibility	
The product environmental declaration A5Q00061135F [1] contains data on environmentally compatible product design and assessments (RoHS compliance, materials composition, packaging, environmental benefit, disposal).	

[2] The documents can be downloaded from http://siemens.com/bt/download

Dimensions

AST20	Transport case
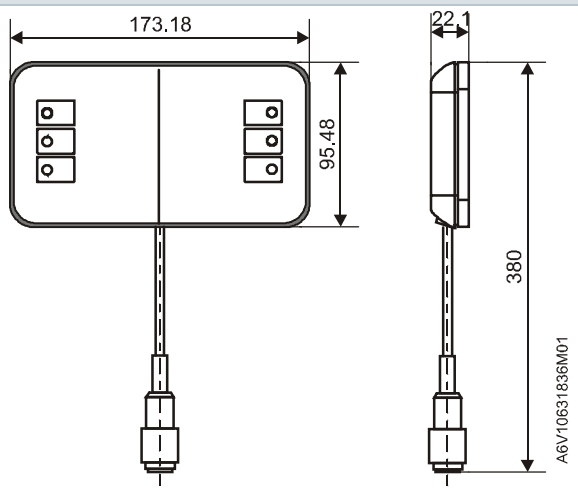	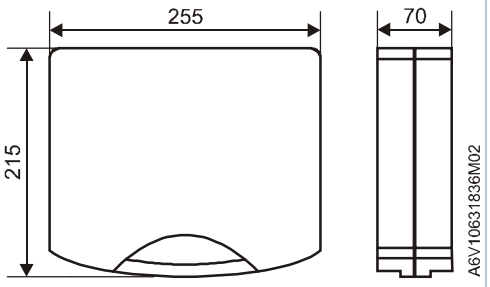

All measurements in mm

Issued by
Siemens Switzerland Ltd
Building Technologies Division
International Headquarters
Theilerstrasse 1a
6300 Zug
Switzerland
Tel. +41 58-724 24 24
www.siemens.com/buildingtechnologies

Document ID A6V10631836_en--_b
Issue 2018-11-21